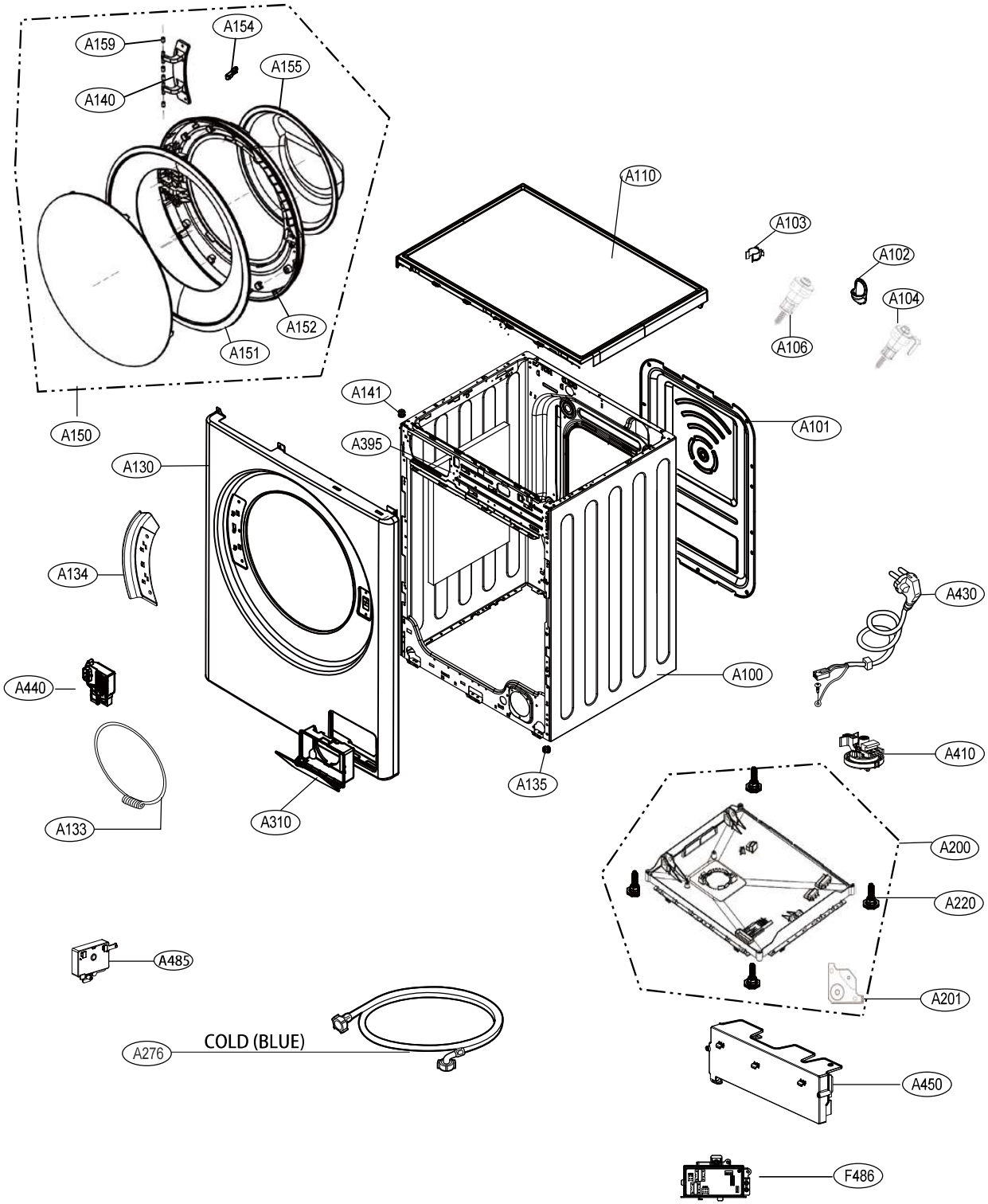
A159
A154
A155
A140
A152
A151
A150
A110
A103
A102
A104
A106
A141
A395
A101
A130
A134
A430
A440
A100
A410
A135
A133
A310
A200
A220
A485
A201
A276
COLD (BLUE)
A450
F486

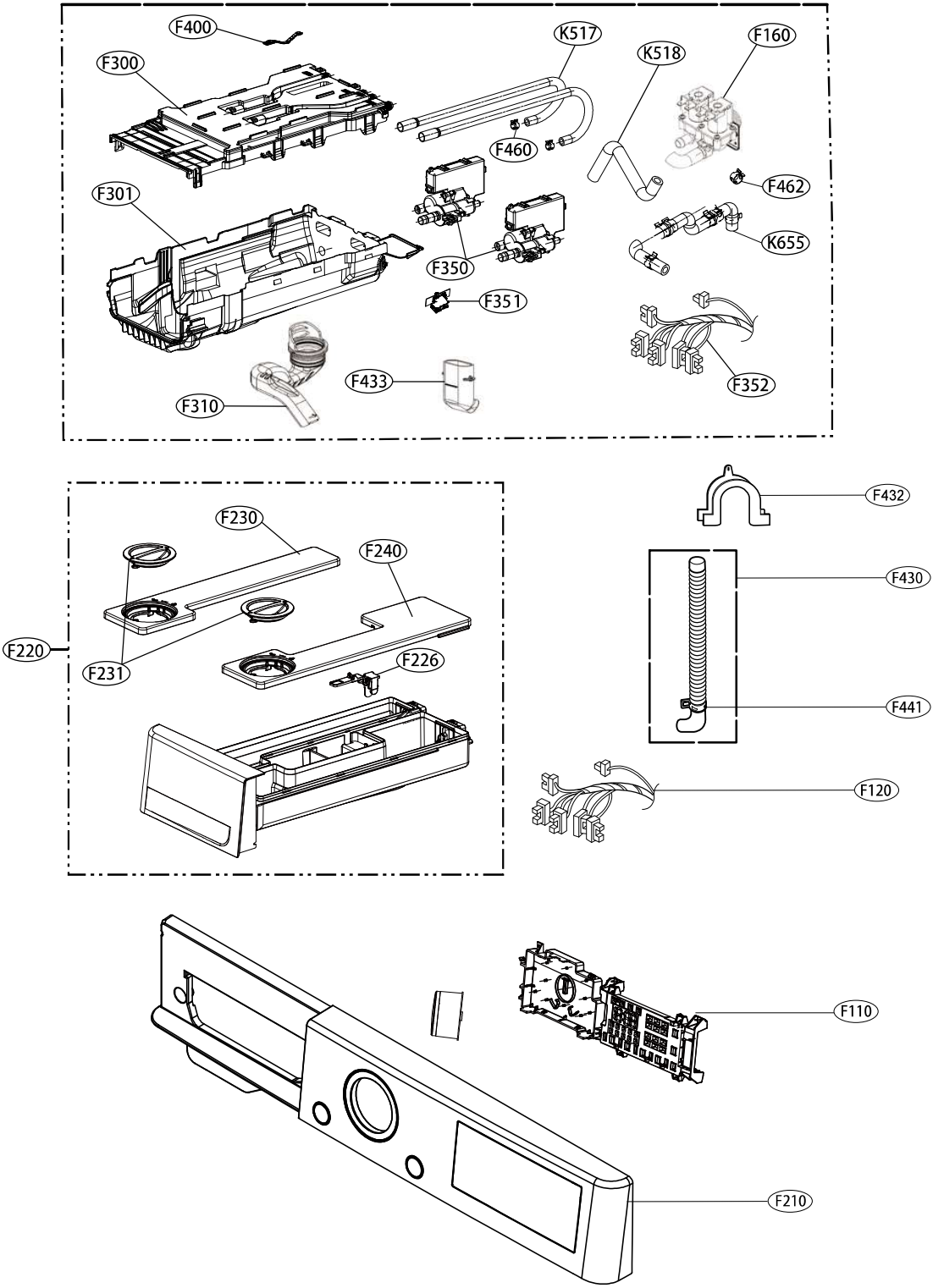
F400
F300
K517
K518
F160
F460
F462
F301
K655
F350
F351
F352
F433
F310
F432
F230
F240
F430
F220
F231
F226
F441
F120
F110
F210

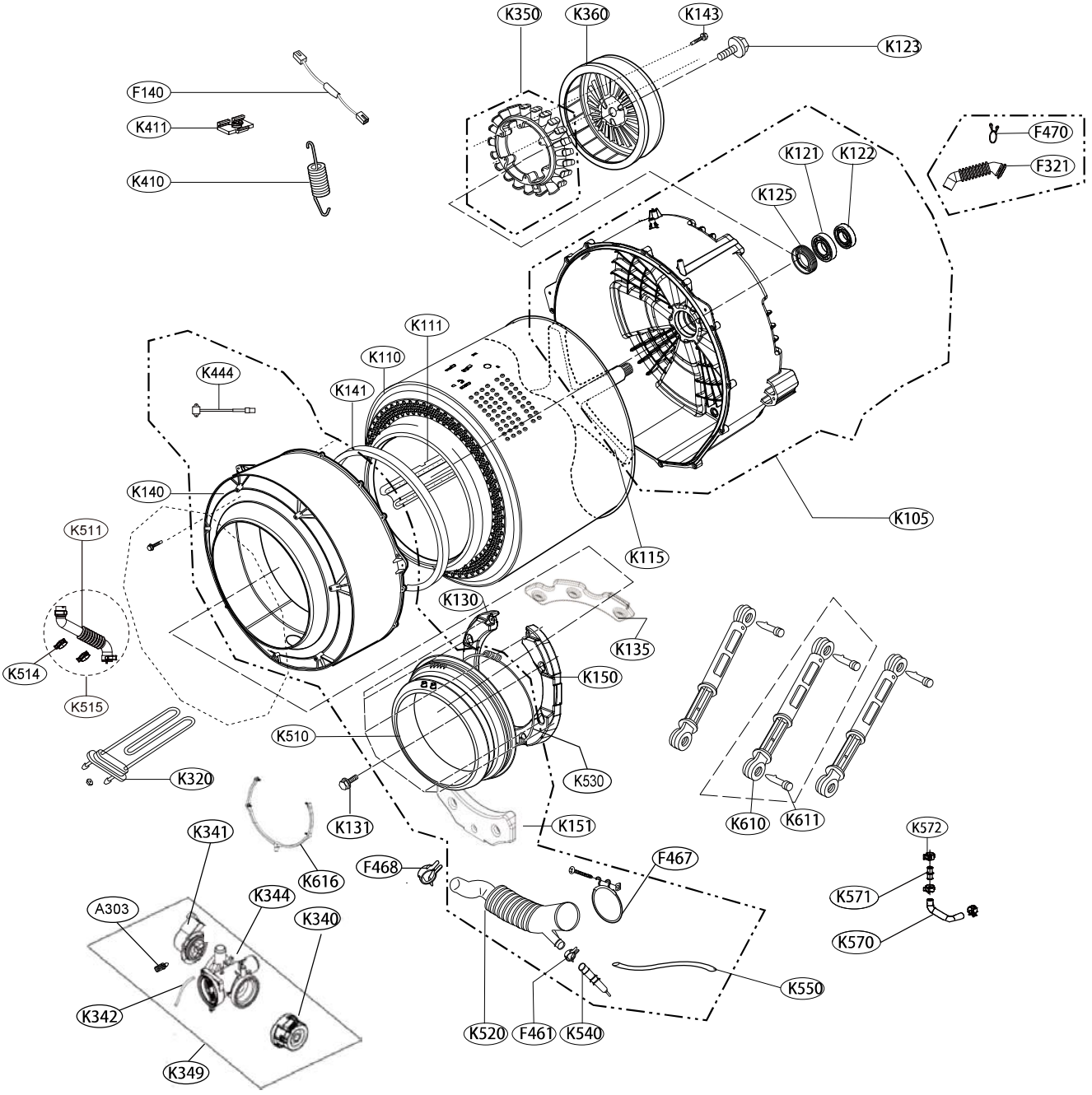
K350
K360
K143
K123
F140
K411
K410
F470
F321
K121
K122
K125
K111
K110
K444
K141
K140
K105
K115
K511
K130
K135
K514
K150
K515
K510
K530
K320
K131
K151
K610
K611
K341
K616
K572
F468
F467
K571
K344
A303
K340
K570
K550
K342
K520
F461
K540
K349